DHI-HY-1500

Addressable Sounder Strobe

- Convenient wiring: two-wire, polarity-free
- Reliable communication: built-in microprocessor, performance is stable
- Ultra-low consumption: ultra-low monitoring current and operating current
- Simple installation: with a plug-in structure, easy to install and construct
- Designed in accordance with EN54-3 and EN54-23 standards

System Overview

DHI-HY-1500 Addressable Sounder Strobe is a mated product of the Addressable Fire Alarm Control Panel, sending out an audible and light alarm signal to remind people on the scene of the accident when fire occurs. It receives activation commands from the Addressable Fire Alarm Control Panel and generates its sound output accordingly.

Functions

Audible and light alarm

When alarm is triggered, an audible and light alarm signal is sent out.

Scene

It is suitable for residential and industrial buildings such as hotels, shopping malls, hospitals, office buildings, schools, banks, libraries, factories, and warehouses.

Technical Specification

Working Voltage	DC24V
Working Current	Monitoring current: ≤ 270μA Maximum operating current: ≤ 7mA
Wiring	Two-wire, polarity-free
Addressing Method	Electrical encoder
Address Range	1–254
Alarm Volume	75 dB–115 dB @ 3 m (A)
Modulation Cycle	4 s–5 s
Flash Rate	1.5Hz–2.0Hz
Communication Distance	1500 m (4921.26 ft)
Operating Temperature	–10°C to +55°C (+14°F to +131°F)
Storage Temperature	–20°C to +65°C (–4°F to +149°F)
Operating Humidity	≤ 95% RH (no condensation)
Color	Shell: Red Lampshade: Clear white
Dimensions	125 mm × 80 mm × 40 mm (4.92" × 3.15" × 1.57")
Weight (with base)	118 g (0.26 lb)
Compliance Standard	EN54-3, EN54-23

Installation

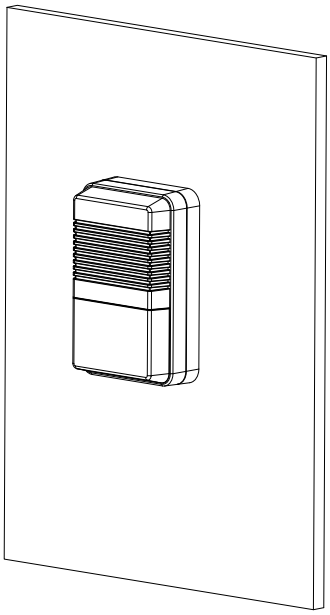

Dimensions (mm/inch)

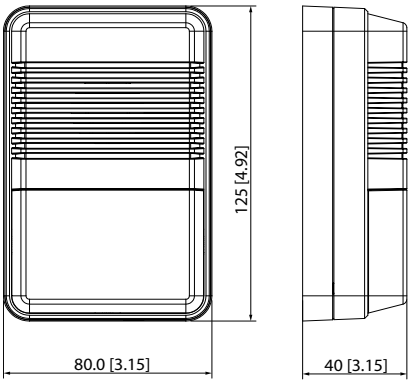

Ordering Information

Type	Model	Description
Addressable Sounder Strobe	DHI-HY-1500	Addressable SounderStrobe
Accessories	DHI-HY-SGDZ	Sounder Strobe Base

© 2024 Dahua. All rights reserved. Design and specifications are subject to change without notice.
Pictures in the document are for reference only, and the actual product shall prevail.