DHI-HY-RI151

LED Remote Indicator

- Flexible application, suitable for a variety of products
- CE certified

System Overview

DHI-HY-RI151 LED Remote Indicator is designed to ensure that alarm signal can be actually transmitted to all locations. Especially for a closed room, any fire inside can be indicated outside. This device can be connected easily in fire alarming system or protection system with led light which consumes less power.

Functions

Flexible application
Connect with Dahua products or third-party products.

Multiple power supply
Powered by 3.3V DC or DC24V DC.

Easy installation
Multiple sets of installation holes, easy to install.

Scene

It is suitable for the commercials, hospitals, schools, residentials, theaters, exhibition halls, transportation hub port stations, office buildings and other occasions.

Ordering Information

Type	Model	Description
Accessories	DHI-HY-RI151	LED Remote Indicator

Technical Specification

Working Voltage	3.3V DC / 24V DC
Current	< 10mA@3.3V DC < 15mA@24V DC
Operating Temperature	−10°C to +55°C (+14°F to +131°F)
Operating Humidity	≤ 95% RH (no condensation)
Dimensions	85 mm × 85 mm × 31 mm (3.35" × 3.35" × 1.22")
Weight	117 g (0.26 lb)
Installation	Wall mount
Certification	CE

Dimensions (mm/inch)

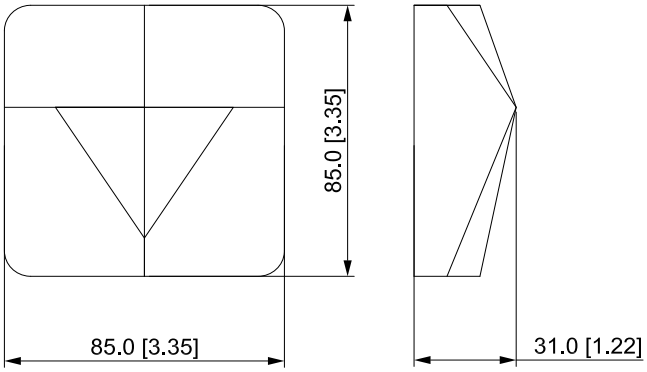

© 2024 Dahua. All rights reserved. Design and specifications are subject to change without notice.
Pictures in the document are for reference only, and the actual product shall prevail.